ORIGINAL INSTRUCTIONS

OPERATING AND MAINTENANCE MANUAL

SPITWATER®

DIESEL COLD WATER HIGH PRESSURE CLEANER

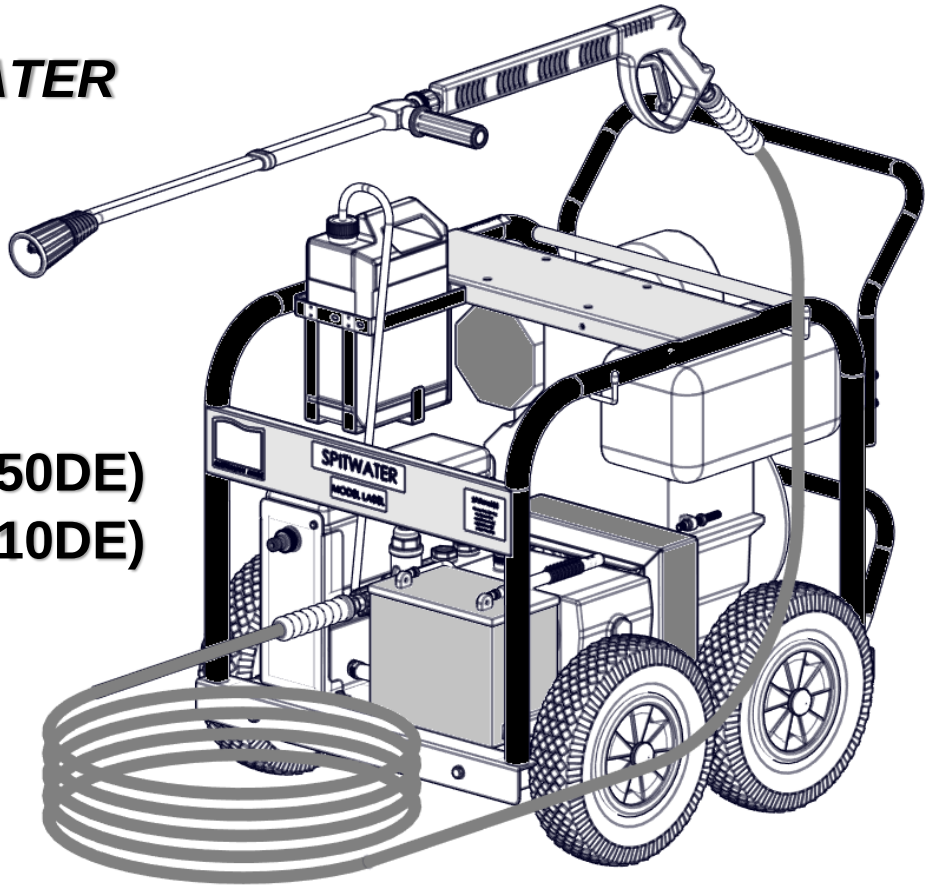

MODEL NO:

SCWD062 (HP12150DE)
SCWD067 (HP15210DE)

MADE IN AUSTRALIA
BY
SPITWATER AUSTRALIA PTY LTD
953 METRY STREET
NORTH ALBURY NSW 2640
AUSTRALIA

SPITWATER AUSTRALIA

WARNING: **Read and understand this instruction manual before operating this unit and retain for future reference.**

Failure to follow operating, safety and maintenance instructions outlined in this manual releases the manufacturer from any responsibility for any accidents or damage incurred and may render any warranty void.

INTRODUCTION

Spitwater Australia is proudly Australian owned and operated since 1983. Our promise is to provide our customers with superior quality high pressure cleaners built to the highest of standards that will see many years of reliable service.

The Spitwater range of high pressure cleaners has been designed to give safe, efficient and dependable service when the correct operating and safety instructions are followed and proper attention is given to all required maintenance procedures in order to maintain the unit in peak operating condition.

This manual provides the up to date information necessary for the user to operate the unit and carry out regular inspection and maintenance.

Please note that the information given within this manual may be subject to revision in compliance with Spiwater Australia's policy of continual improvement.

Spitwater high pressure cleaners should only be used in the manner and purpose for which they were intended and in accordance with the recommendations and safety precautions detailed in this manual.

All Spitwater high pressure cleaners undergo rigorous safety and operational tests before being dispatched into the market, however it is still imperative that prior to use, all operators have read and understood all information and instructions provided and are aware of possible hazards.

GENERAL DESCRIPTION & INTENDED USE

Spitwater high pressure cleaners are specifically designed to solve all problems relating to washing, degreasing, descaling and disinfecting in a wide range of commercial and industrial situations. Some examples applications are in the cleaning, building, transport, light and heavy manufacturing and primary industries.

SPARE PARTS, ACCESSORIES AND AFTER SALES SERVICE

Spitwater has an extensive range of spare parts and accessories to suit all your cleaning needs. For spare parts, accessories and service please contact **1800 SPITWATER (1800 774 892)** and to view Spitwater's extensive range of high pressure cleaners online visit **www.spitwater.com.au**

For international spare parts, accessories and service please contact **enquiries@spitwater.com**

TECHNICAL DATA					
	MODEL	**HP12150DE**	**HP15210DE**		
	PRODUCT	**SCWD062**	**SCWD067**		UNIT
PERFORMANCE					
	FLOW RATE	12	15		L/M
	PRESSURE	15	21		MPa
	PRESSURE	150	210		BAR
	NOZZLE	135	045		
WATER INLET					
	PRESSURE MAX	1.2	1.2		MPa
	TEMP MAX	40	40		°C
ENGINE					
	ENGINE MODEL	KUBOTA OC60	KUBOTA OC95		
	TYPE	DIESEL	DIESEL		
	SPEED	3570	3570		RPM
	POWER	5.6	8.5		HP
	FUEL CAPACITY	3.6	5.5		L
	STARTING SYSTEM	ELECTRIC	ELECTRIC		
	OIL TYPE	15W-40	15W-40		
	OIL CAPACITY	1.3	1.5		L
BATTERY					
	VOLTAGE	12	12		V
	Ah(20HR)	40	40		Ah
	CCA	330	330		A
PUMP					
	MODEL	W140	WS251		
	OIL TYPE	15W-40	15W-40		
	OIL CAPACITY	0.4	-		L
OTHER					
	DETERGENT BOTTLE CAPACITY	5	5		L
VALUES DETERMINED AS PER AS/NZS 60335.2.79					
	SOUND PRESSURE LEVEL Lp	85	83.3		dB (A)
	UNCERTAINTY Kp	3.9	3.9		dB (A)
	SOUND POWER LEVEL Lw + UNCERTAINTY Kw	99.9	98.2		dB (A)
	REACTION FORCE ON SPRAY GUN	34.64	50.45		N
	REACTION TORQUE ON SPRAY GUN	0	11.56		Nm
	VIBRATION ON SPRAY GUN	-	-		m/s^2
	VIBRATION ON LANCE	-	-		m/s^2
	UNCERTAINTY Kp	-			m/s^2
DIMENSIONS & WEIGHT (UNPACK)					
	LENGTH	823	869		mm
	WIDTH	605	687		mm
	HEIGHT	761	827		mm
	WEIGHT	110	140		Kg

The manufacturer reserves the right to modify designs, features and technical data without notice.

DESCRIPTION OF SYMBOLS

The following symbols are used throughout this instruction booklet in order to mark important paragraphs or sections that require particular attention. Their meaning is listed next to them for your attention.

	WARNING: Failure to follow instruction could result in serious injury or even death		**WARNING:** Failure to follow instruction could result in damage to unit		**TIPS AND INSTRUCTIONS** to ensure safe and proper operation
	PERSONAL PROTECTIVE EQUIPMENT (PPE) Eye protection recommended		PERSONAL PROTECTIVE EQUIPMENT (PPE) Ear protection recommended		PERSONAL PROTECTIVE EQUIPMENT (PPE) Safety boots recommended
	PERSONAL PROTECTIVE EQUIPMENT (PPE) Respiratory protection		PRESSURE GAUGE		CHEMICAL INJECTOR OPEN / CLOSE
	OIL INDICATION		UNIT ON / OFF		VISUAL CHECK / VERIFICATION
	MANUAL ASSEMBLY		USE APPROPRIATE SPANNER		AUTHORIZED SPITWATER SERVICE AGENT

The following symbols are used on the unit in order to warn user of potential injury if not cautious. Their meaning is listed next to them for your attention.

	CAUTION Hot surface. Do not touch

IMPORTANT SAFETY INSTRUCTIONS AND PRECAUTIONS

WARNING: This high pressure cleaner shall only be used by persons instructed in its use and who have been authorized to do so. Before using this high pressure cleaner please pay particular attention to the following safety warnings as failure to do so could result in serious injury or even death.

SAFETY LABELS, UNIT COMPONENTS FEATURES & CONTROLS

- *Always pay attention to the safety instructions provided on each label. Do not alter or remove safety labels*

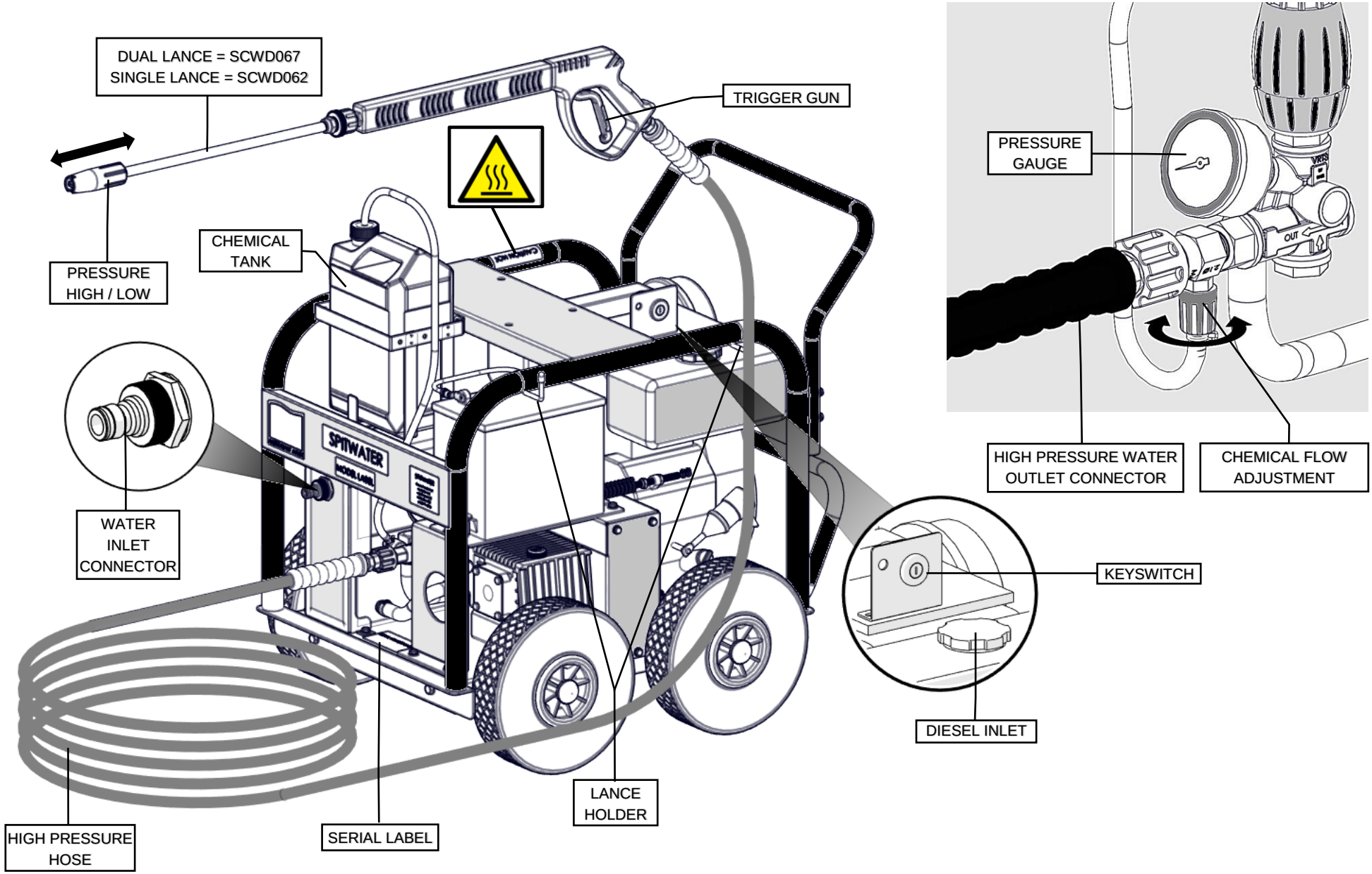

GENERAL SAFETY PRECAUTIONS

1. OBSERVE SAFETY INSTRUCTIONS

- Make sure you have read and understood the whole instruction manual before installing, operating or carrying out any maintenance on this unit.
- Warnings and data plates on the unit provide important directions and information on the safe use of the unit.
- In addition to these operating and safety instructions please make sure that all accident prevention regulations applicable in the country of use are followed.
- In addition to these operating and safety instructions any standards relating to the installation and operation of high pressure cleaners applicable in your country must be strictly followed.
- This unit is not intended for use by children. Children must always be supervised when in the vicinity and ensure that they DO NOT play with the unit. Further, it is not intended for use by persons with reduced physical, sensory or mental capabilities, or lack of experience or knowledge. It must only be operated by persons instructed in its use who have been especially authorized to do so.
- DO NOT operate the unit without appropriate personal protective equipment PPE.

2. FIRE PREVENTION

- Store flammable fluids in approved containers and cabinets away from sparks and heat.
- To avoid fire, be alert for leaks of flammable substances from hoses and lines.
- The exhaust gas muffler is very hot. To prevent a fire, do not expose dry grass, mowed grass, oil or any other combustible material to exhaust gas. Keep the engine and muffler clean at all times.
- Be sure to stop the engine before cleaning the unit.
- Under NO circumstance use flammable liquids, undiluted acids or solvents as a chemical as the spray produced would be highly flammable.

3. SAFE HANDLING OF FUEL AND LUBRICANTS

- Always turn off the engine and let the unit cool down before refueling and/or lubricating.
- DO NOT smoke or allow flames or sparks in your work area. Fuel is extremely flammable and explosive under certain conditions.
- Refuel in a well ventilated and open area. When fuel and/or lubricants are spilled clean immediately.
- DO NOT mix petrol or alcohol with diesel fuel. Incorrect fuels shall not be used as they may prove hazardous.
- Use only clean and approved fuel, store in appropriate containers and dispensers.

4. EXHAUST & FLUE GASES

- Do not use combustion engine powered machines indoors unless adequate ventilation is assessed by national labor authorities.
- Exhaust contains poisonous carbon monoxide gas that can build up to dangerous levels in closed areas. Breathing carbon monoxide can cause unconsciousness or death. Never run the engine in a closed, or even partly closed area where people may be present.
- Ensure that any exhaust emissions are not in the vicinity of air intakes.

5. BURNS & HOT SURFACE

- To avoid burns, be cautious of hot components, e.g. muffler, muffler cover, engine body and radiator during operation and after the engine has been shut off.
- DO NOT remove the radiator cap while the engine is running or immediately after stopping.

6. CHEMICAL HAZARD

- In the event of accidental contact with cleaning detergent, battery acid or oil, follow instructions provided by the manufacture and/or product retailer and wash it off immediately with clean running water.
- Wear rubber gloves to avoid personal injury during chemical handling.
- If spillage occurs clean up immediately before using the unit.

7. CHECKS AND SERVICE

- Inspect the unit each day before use. Follow “Daily inspection check list” guide *Table-B* in the SERVICE / CARE section.
- Service the unit regularly based on its usage. Follow “Usage vs Service frequency” matrix *(Table-A)* in the SERVICE / CARE section.

OPERATIONAL SAFETY PRECAUTIONS

All health and safety regulations applicable to general safe work practices, as well as safe operation of equipment, as well as any specific standard for safe operation of high pressure cleaners according to local regulations must be followed. When operating this unit,

1. PERSONAL SAFETY

- Personal protective equipment (PPE) must be worn when operating this unit including footwear, clothing, eyewear and all other necessary equipment according to regulations and requirements.
- Always wear appropriate ear protection if the noise level indicated in the technical data of this appliance exceeds 80dB (A).
- When operating the unit be alert and hold onto the gun and lance firmly with both hands.
- When the gun is operated, the user is subject to very strong recoil forces and torque.

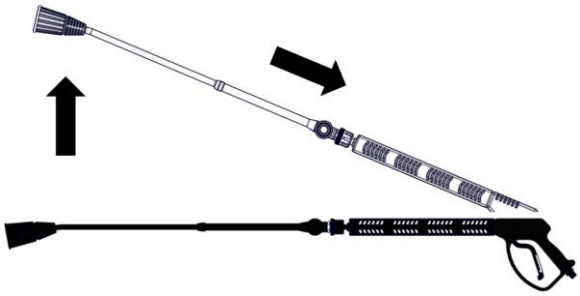

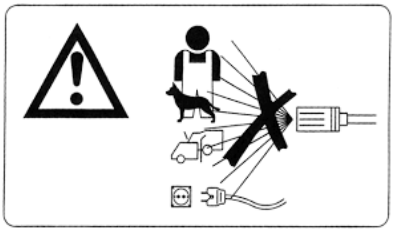

- There is a risk of high pressure water jet injury. Never aim the jet at yourself, other people or animals as this could result in serious injuries or even death.
- There is a risk of electrocution. Never aim the water jet at the unit itself or other live electrical equipment as this could result in serious injury or even death.
- Depending on the application of high pressure cleaners, hydrous aerosols may be formed. The employer shall perform a risk assessment in order to specify the necessary protective measures regarding aerosols, depending on the surface to be cleaned and its environment. Shielded nozzles can be used for high pressure cleaning, which will reduce the emission of hydrous aerosols dramatically **OR respiratory masks of class FFP 2, an equivalent or higher are suitable for the protection against hydrous aerosols.**

2. WORK ZONE SAFETY

- The work zone must be kept clear of all persons not authorized to be there. If other people must be in the work area they too must wear all necessary personal protective equipment and must be aware of the existing hazards / risks.
- This unit must not be operated in hazardous areas. Also to prevent fire hazards it must not be operated near inflammables such as petrol, grain dust, solvents, thinners etc.
- When operating the unit make sure the operating area is not releasing health or environmental hazardous substances (E.g. asbestos, oil etc)

3. EQUIPMENT SAFETY

- Never exceed the maximum working temperature and pressure as indicated on the unit data plate and in this manual.
- Only use this unit with cleaning chemicals recommended by Spitwater. The use of other cleaning agents or chemicals may adversely affect the safety of the unit.
- Never operate the unit without water as even a brief operation without it will cause severe damage to the pump and other components.
- When finishing work, switch OFF the unit and release any trapped pressure in the hose and engage the gun trigger lock.
- Never leave the unit unattended while it is running.
- Never lock the spray gun trigger in the open position.
- Never use accessories or spare parts that were not designed for use with this unit as this could cause damage to the unit. Spitwater recommends the use of original accessories and spare parts available through Spitwater and its extensive dealer network.
- Never use a nozzle size other than that specified in the technical data. Using the wrong size nozzle could damage the unit.
- Keep flammable materials away from, and do not place anything on the unit while it is running.

SAFETY FEATURES OF THE UNIT

Pressure Regulating Valve: This unit is equipped with a pressure regulating valve which prevents damage to the unit by keeping the system pressure safely below a desired limit. When the system pressure exceed the setting of the valve spring, the fluid unseats the valves and bypasses to the reservoir.

In case of EQUIPMENT FAILURE / BREAKDOWN turn the unit OFF and see “SERVICE / CARE RECOMMENDATIONS AND DIY TROUBLESHOOTING GUIDE” section.

STORAGE / TRANSPORT

1. For safe movement of the unit between work areas make sure that the unit has been switched off. Allow it to cool down if necessary. Bleed of any trapped pressure according to instructions and confirm all safety locks are engaged.
2. The safest way to lift the unit is to use the forklift. DO NOT lift the unit from the side. (Refer below figure)
3. For safe transportation in and on vehicles make sure the unit is appropriately strapped, in order to prevent it from sliding or falling.

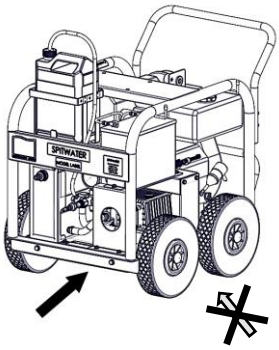

4. If transporting the unit make sure there is no possibility for the temperature to be at or below 0°C. If it is necessary to transport the unit at or below 0°C contact your authorized Spitwater service agent for advice.
5. When not in use the unit must be stored in a dry building where there is no possibility for the temperature to be at or below 0°C. If necessary to store the unit at or below 0°C contact your authorized Spitwater service agent for advice.
6. Keep detergent lines clean and flush regularly especially if the unit is not used often.

PROTECT FROM FROST

1. Caution should be taken when lifting the unit. Always adopt safe lifting techniques in order to avoid damage to the unit and injuries to person.
2. Remove carton and carefully remove the unit from the pallet keeping it upright. Visually check for any damage, leaks or other issues. If any problem is found, contact your Spitwater agent immediately.
3. Identify the unit from the information on the serial label affixed to the unit.

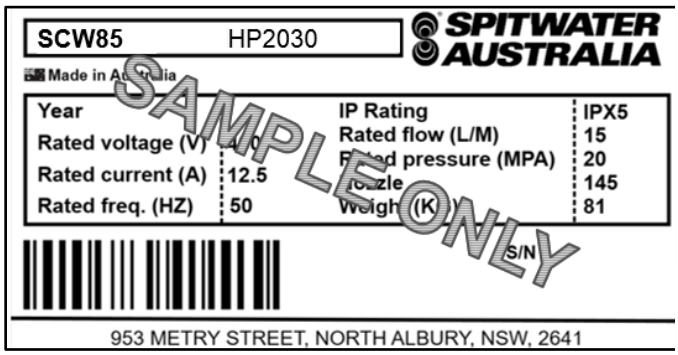

4. The unit must be positioned on flat stable ground and must be in an upright position before operating. Do not operate on an uneven surface or on loose gravel.
5. The engine and exhaust becomes very hot during operation. Keep the unit at least 1metre (3 feet) away from buildings or other equipment during operation.

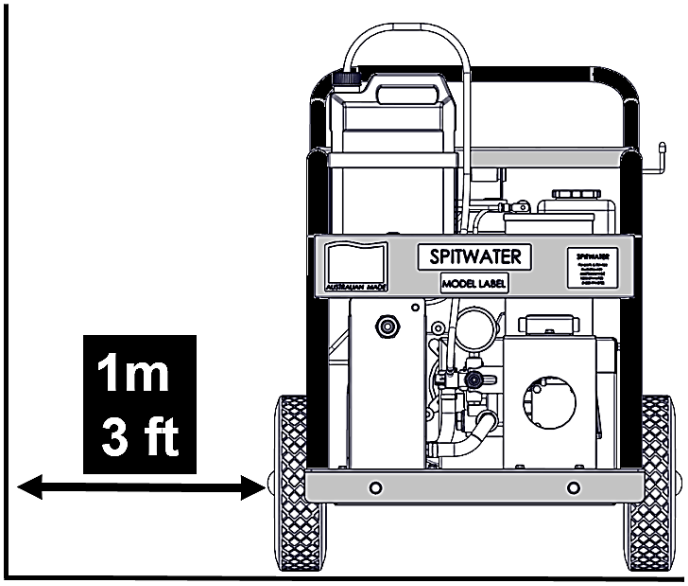

6. Replace the red oil travel plug fitted on the pump with the yellow dipstick supplied in the accessories bag.

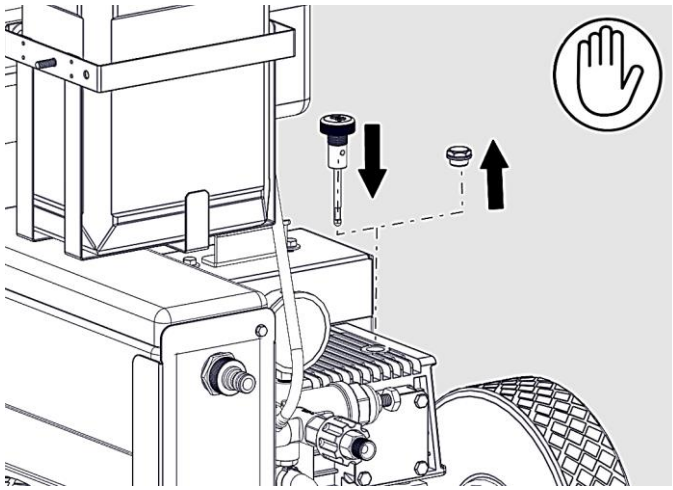

7. Check the oil level in the pump using the dipstick or the sight glass on the back / side of the pump. Make sure the level is between min/max level notches on the dipstick, or is level with the indicator on the sight glass. If oil reservoir needs replenishing only use oil of a type as listed in the data sheet in this instruction manual.
8. Connect the handle to the frame using the supplied screws and washers.

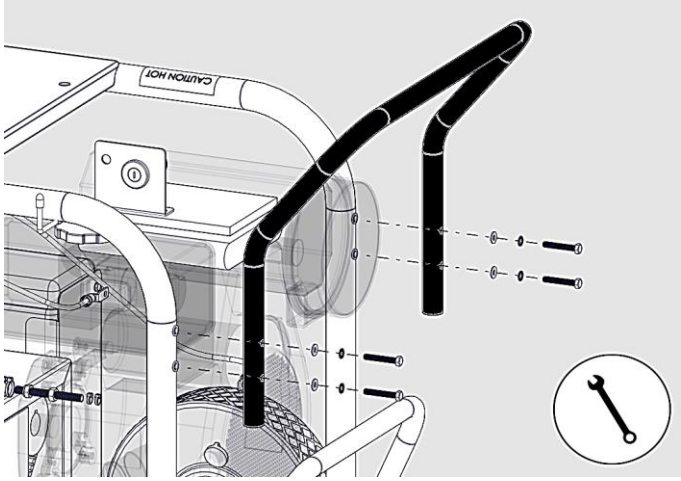

9. NOZZLE ASSEMBLY (SCWD067 ONLY)

Connect the high pressure nozzle (smaller hole) and the low pressure nozzle (larger hole) to the lance. Do not over tighten and make sure that the nozzle positions do not interchange during assembly. Add nozzle shield after nozzle assembly. Refer diagram below.

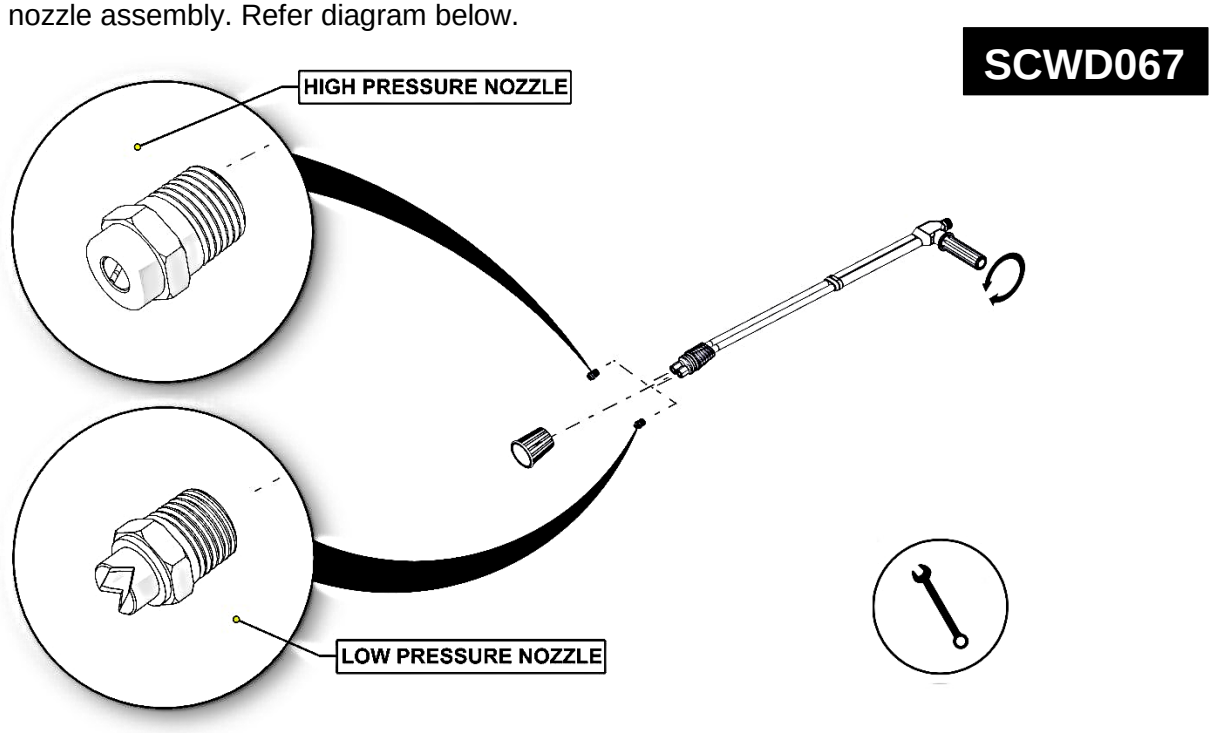

10. LANCE, TRIGGER GUN & HIGH PRESSURE HOSE ASSEMBLY (SCWD067 ONLY)

- Connect the lance to the spray gun by an in-built quick release coupling.
- Connect the high pressure hose fitting to the spray gun. Do not over tighten.
- Connect the quick release adaptor to the high pressure hose fitting. Do not over tighten.

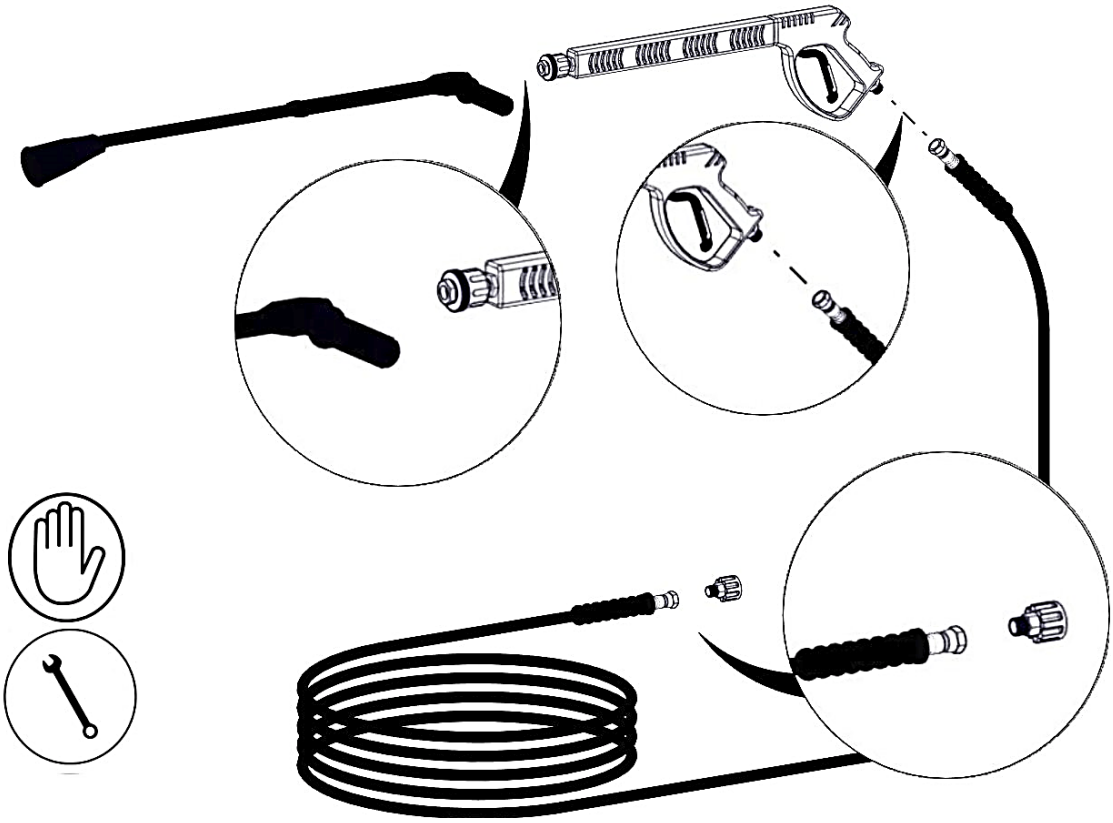

9. LANCE, TRIGGER GUN & HIGH PRESSURE HOSE ASSEMBLY (SCWD062 ONLY)

- Connect the lance to the spray gun by an in-built quick release coupling.
- Connect the high pressure hose fitting to the spray gun. Do not over tighten.
- Connect the quick release adaptor to the high pressure hose fitting. Do not over tighten.

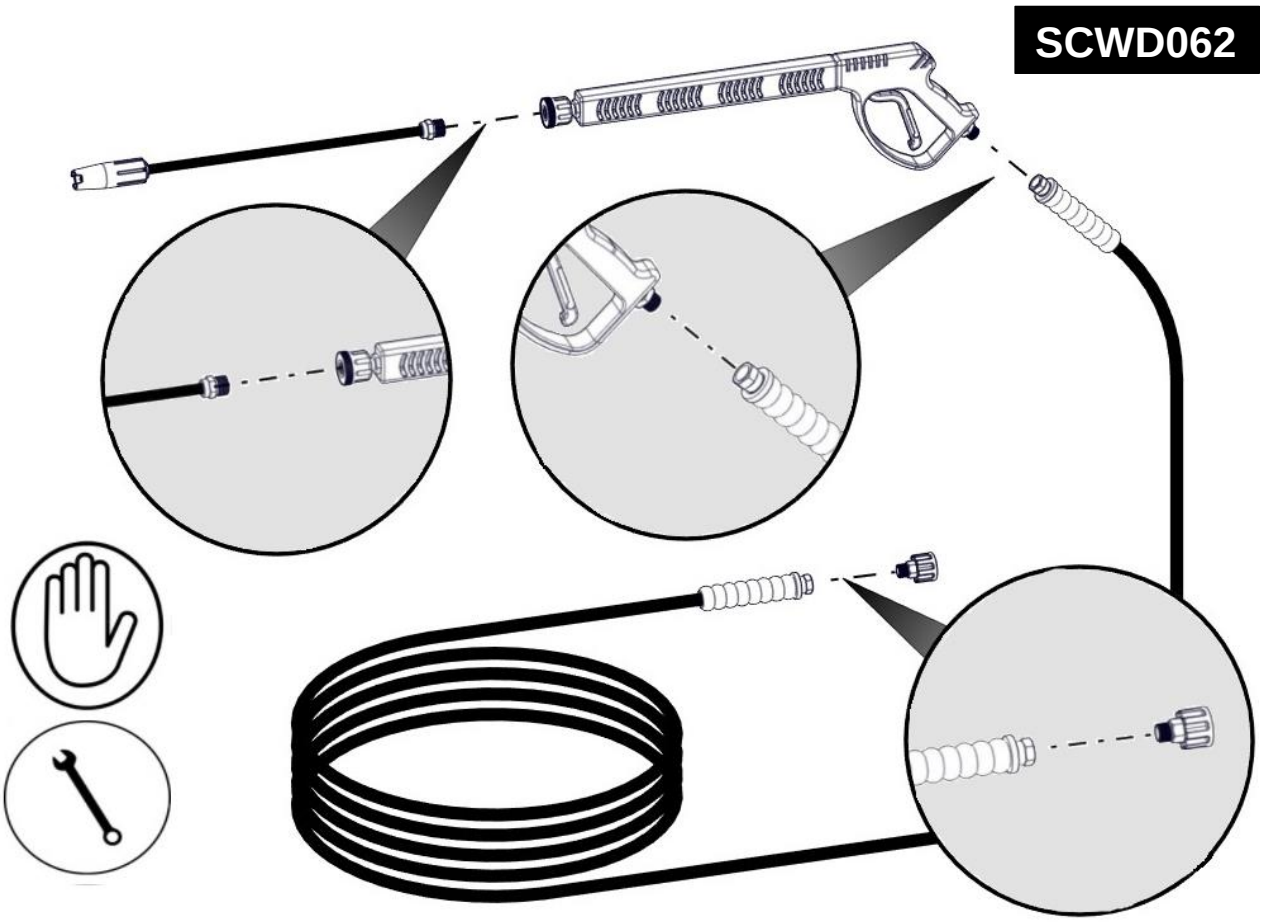

10. ASSEMBLY OF HIGH PRESSURE HOSE WITH THE UNIT

- Connect the quick release high pressure hose to the outlet connector of the unit.

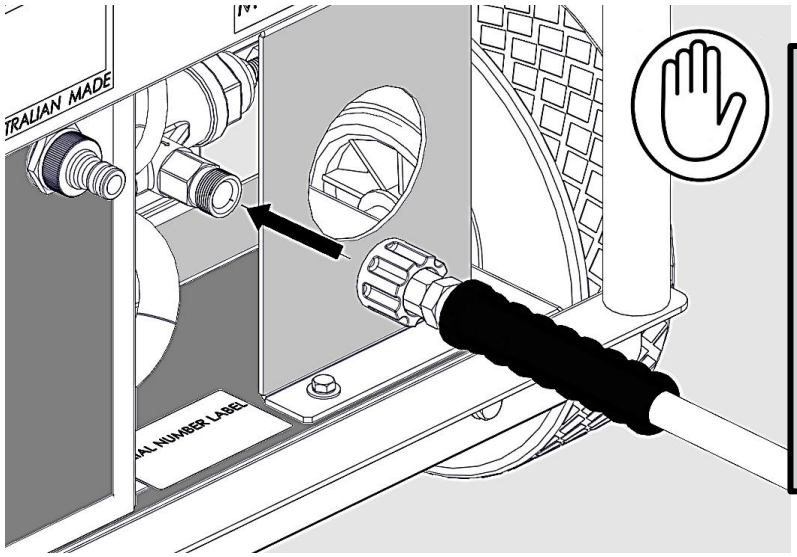

- *High pressure hoses, fittings and couplings are important for the safety of the machine. Use only high pressure hoses, couplings and fittings recommended by Spitwater.*
- *Do not pull on high pressure hose in order to move the unit.*

11. WATER INLET CONNECTION

- Connection to potable water mains can be achieved by using a general garden hose set. (1/2 inch diameter)
- Connect the water supply hose to the water inlet connection. In case of poor water quality the use of an external water filter is recommended. Contact your Spitwater agent for advice and /or supply.
- Make sure the water supply temperature and pressure meet the values specified in the technical data, then turn the water supply on. Visually check for leaks and contact your Spitwater service agent if found.
- Open the water supply and fill the water tank. The float valve will automatically stop the water flow when the water tank is full.
- Water that has flowed through backflow preventer is considered to be non-potable (non-drinkable).
- For suction supply / non-pressure water supply, other than potable water mains, contact your authorized Spitwater service agent for advice.

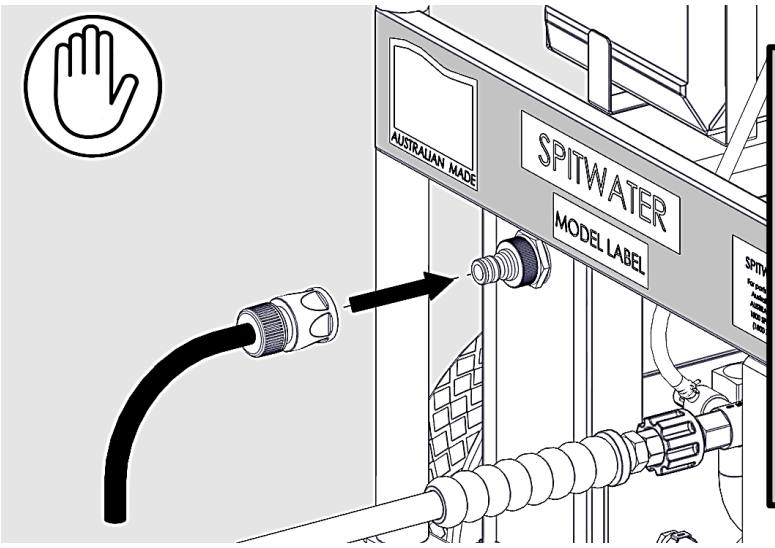

WARNING:

- *This high pressure cleaner is only allowed to be connected with the drinking water mains, when an appropriate backflow preventer has been installed, AS/NZS 60335.2.79.*
- *Follow all local standards and regulations applicable to water connection.*

12. Remove the **DIESEL** tank cap and fill the diesel tank with clean filtered diesel. **ONLY USE CLEAN DIESEL IN THIS UNIT**, as using any other fuel will create a risk of explosion and damage to the unit.

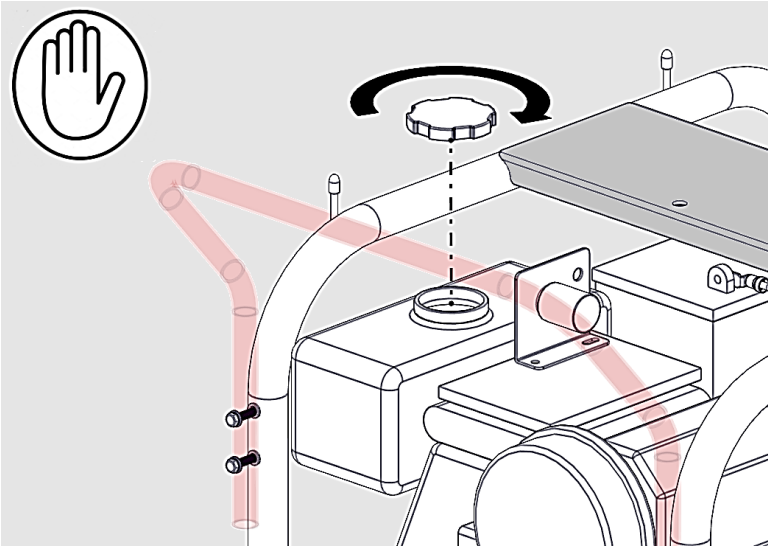

OPERATING INSTRUCTIONS

GENERAL PRE-START CHECK

1. Inspect the unit every day to confirm that it is safe and in proper working order before putting it into service. Follow the **"DAILY INSPECTION CHECK LIST"** in the SERVICE / CARE section as a guide. If the unit is damaged or faulty in anyways, DO NOT use it and immediately contact your authorized Spitwater service agent for advice.

TO START

1. Always wear appropriate Personal Protective Equipment. (PPE)

2. Insert the key into the key switch and turn it to ON position.

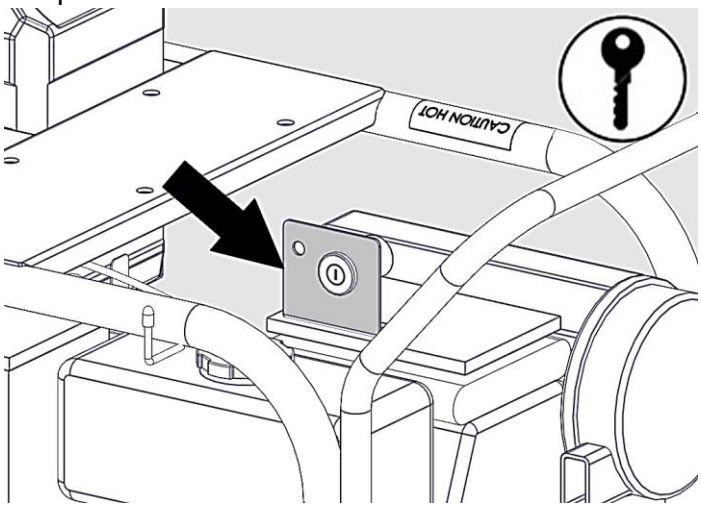

3. Turn the key to the STARTING position (ST) and the unit should turn start. Release the key immediately when the engine starts.

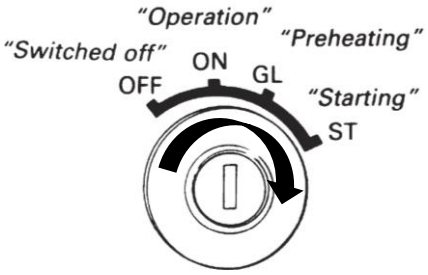

NOTE:
Never set the starter switch to "ST" during operation to avoid damaging the starter motor.

COLD START

1. Turn the key to the PREHEAT position "GL" for approximately 5 seconds, then set it to "ST" starting.
2. If the engine does not start after starter motor is activated for 10 seconds, wait for about 30 seconds and try again, otherwise, damage to starter motor may occur.

Refer KUBOTA instruction booklet enclosed for detailed cold start information.

TO USE

1. Release the spray gun trigger lock.
2. Pull the trigger on the spray gun and allow water to run through the system for a few minutes to expel air from the hydraulic system. If air remains in the system, open and close the spray gun a few times to expel. **Note:** ***If this is the first use of the unit or the unit has been left idle for an extended period of time it is advisable to run this operation with the front part of the lance disconnected in order to avoid debris or scale being lodged in the nozzle and blocking it.***

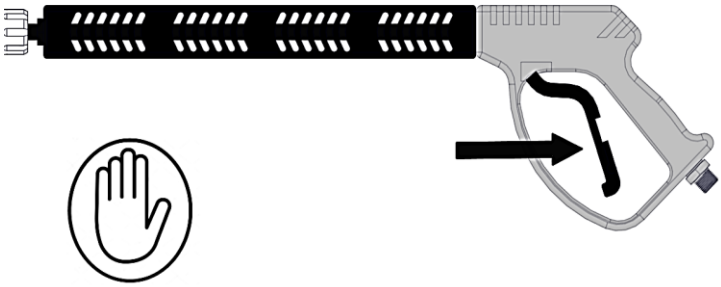

3. Check that the pressure indicated on the pressure gauge matches the value on the data plate in the technical data. Also check that when the trigger is released the pressure shown on the gauge returns to zero.

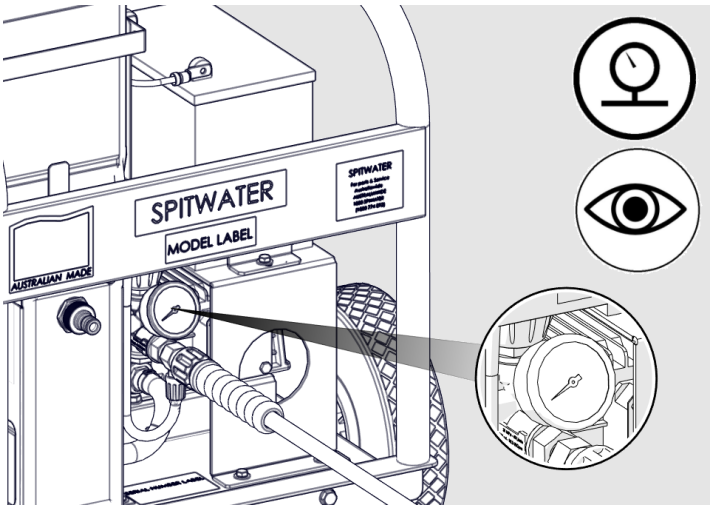

USAGE TIPS:

- *Use the unit as necessary to carry out cleaning while trying to minimize where possible opening and closing the spray gun trigger as this will lead to premature wear of the parts.*
- *Do not hold the nozzle too close to the surface to be cleaned as this may damage the nozzle. Start cleaning at a comfortable distance and work closer as necessary.*

PRESSURE ADJUSTMENT HIGH / LOW

SCWD062 ONLY

1. To adjust spray angle, turn the nozzle head clock wise and anti-clock wise as desired.

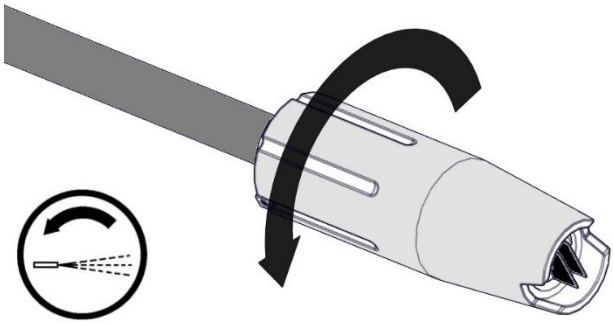

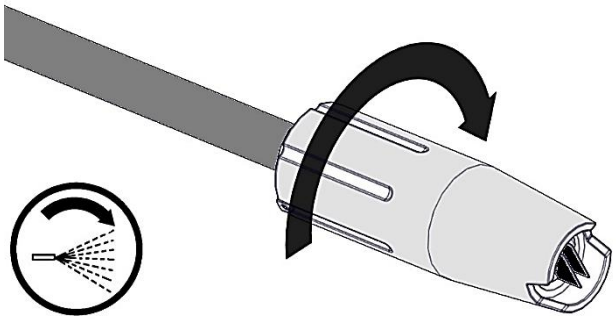

2. To activate high pressure push the lance head outwards and pull the trigger and to activate low pressure pull the lance head inwards.

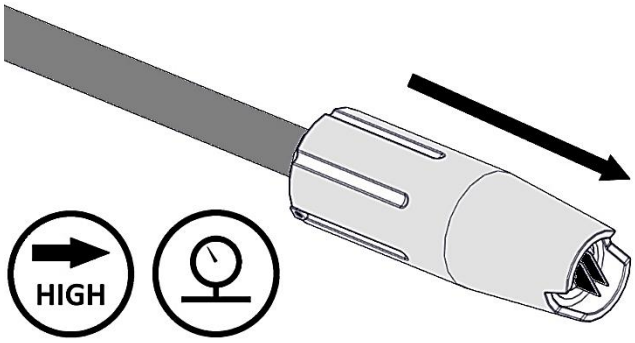

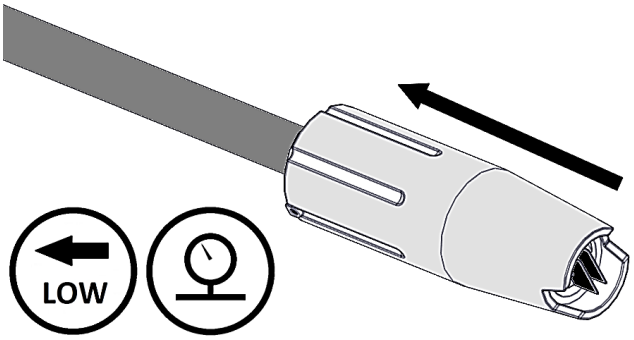

SCWD067 ONLY

1. To activate high pressure turn the lance handle clockwise and pull the trigger and to activate low pressure turn the lane handle anti-clockwise.

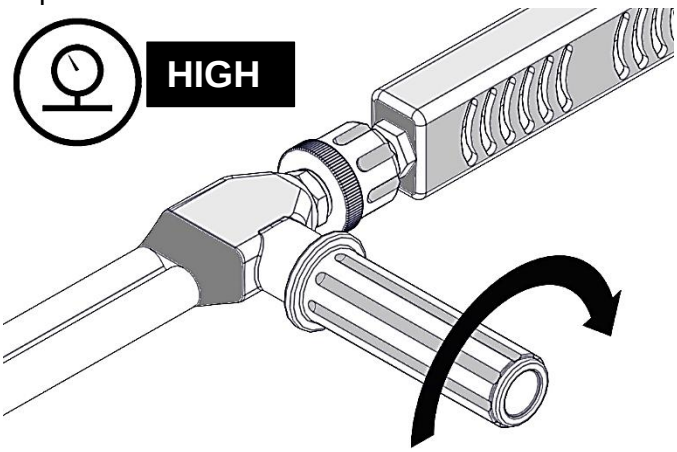

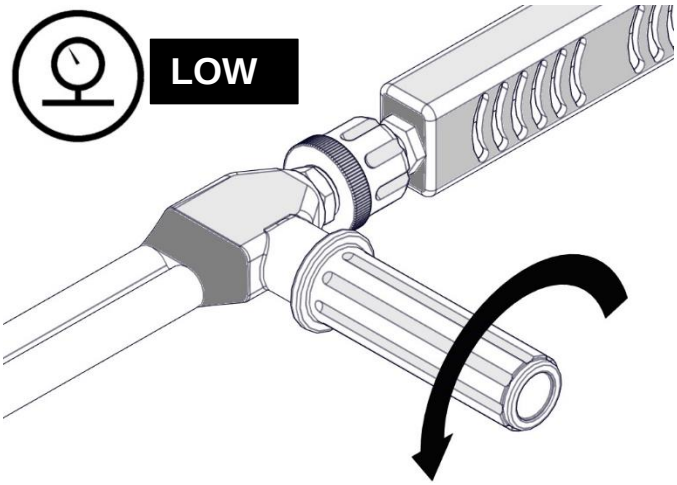

USING CLEANING AGENT

1. Fill the detergent tank with cleaning solution. Only use a cleaning detergent approved by the manufacturer and do not use any circumstance acid or corrosive products (contact an authorized service agent or the manufacturer if in doubt).

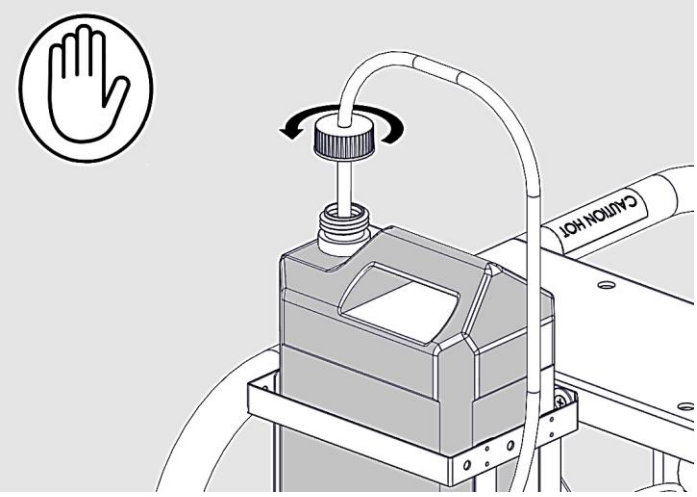

2. If detergent is required it **CAN BE USED IN LOW PRESSURE ONLY.**
3. Open the chemical injector by turning the knob anti-clockwise until the desired affect is reached. When the trigger is pulled, water mixed with detergent will be sprayed.

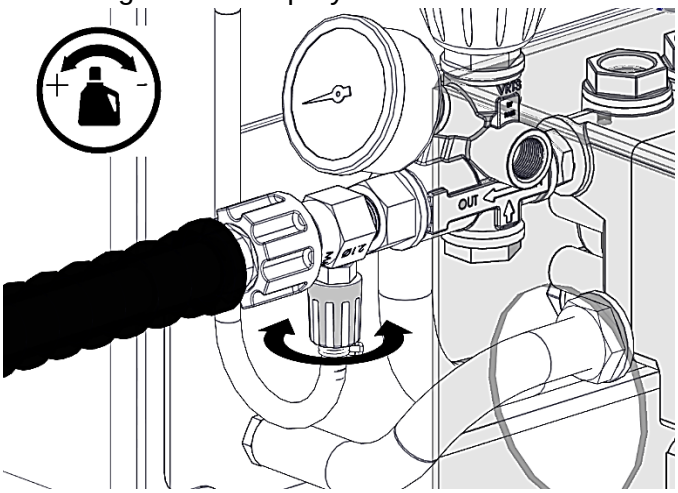

4. Never allow sprayed detergent to dry on the cleaning surface, as this may damage the surface.

TO STOP

1. Close the chemical injector by turning it clockwise until it stops.
2. Turn the key switch to OFF position. DO NOT turn the unit keyswitch to OFF position, when the trigger is in pulled position.

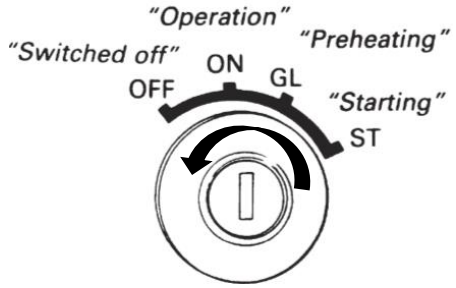

3. Release all trapped water pressure in the unit by pulling the trigger of the spray gun, then engage the spray gun trigger lock. Failure to follow this instruction will leave the unit in a potentially unsafe manner.

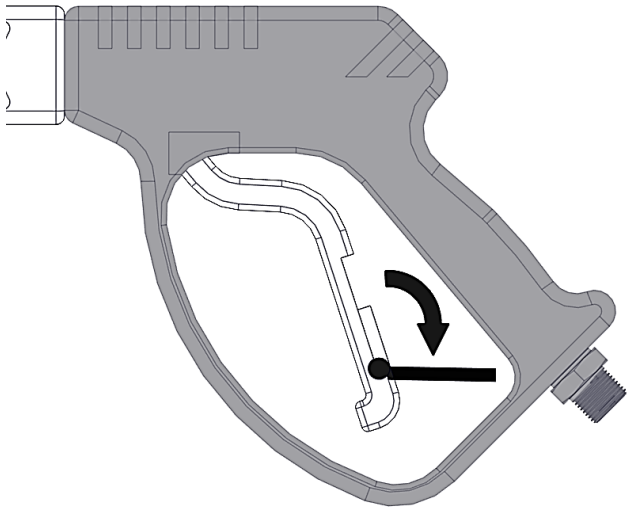

4. If the unit is to be left unused for an extended period, be sure to clean the detergent line by running the water through it and dropping the detergent line into a container of clean water.

SERVICE / CARE RECOMMENDATIONS AND DIY TROUBLESHOOTING GUIDE

SAFETY PRECAUTIONS

1. To ensure machine safety, use only original spare parts from the manufacturer or approved by the manufacturer.
2. Carry out all regular maintenance and inspections as listed in this manual using original Spitwater parts where required.
3. Always make sure before carrying out any maintenance that the unit is turned off, disconnected from the battery (at least positive or negative terminal of the battery) and allowed to cool down and any trapped high pressure in its system has been released.
4. Never carry out any maintenance work not specifically outlined in this booklet and never make any technical modifications to this unit
5. This unit is fitted with safety devices which are set and sealed at the factory. It is very important these devices receive their routine maintenance to assure your safety as well as necessary protection of the unit.
6. There are a number of important components that have been set and sealed at the factory. Never under any circumstances tamper with, modify or adjust these settings.
7. Make sure this unit is regularly serviced by an authorized Spitwater service agent according to the servicing requirement outlined in this booklet.

Always dispose of oil, batteries, chemicals and unused equipment safely and according to the requirements of local authorities

SERVICE INSTRUCTIONS

To maintain this unit in peak working condition during its operating life it is necessary to carry out regular maintenance operations and replace worn or broken parts immediately upon their failure. Spitwater recommends that all maintenance is carried out by an authorized Spitwater service agent using original Spitwater spare parts.

Failure to follow the maintenance guidelines in this manual releases the manufacturer from any responsibility in reference to injuries and damages to both persons and goods.

DAILY INSPECTION CHECK LIST

		CHECKED & OK
		ATTENTION REQUIRED
		CHECKS BEFORE UNIT START
		Ensure all guards, covers and shields are in place before operating the unit.
		Clean off dust or other foreign matter accumulated on the muffler. Wipe up any spills immediately.
		Check for water leaks at supply inlet and other hose connections
		Check high pressure hose for kinks, damage or exposed braids. If the hose is damaged in any way the unit must not be used and the hose replaced immediately.
		Check fuel level, detergent level, detergent tube & filter.
		Make sure oil colour has not gone "milky" in appearance.
		Check engine oil level, oil leakage and contamination.
		Check for any service due, based on "USAGE VS SERVICE FREQUENCY" Table-A.
		CHECKS DURING UNIT RUN
		Check for proper functioning of pressure gauge.
		Check for water leaks at high pressure hose fittings.
		Check pressure gauge to show working pressure as per Technical data sheet, when the trigger is in ON position.
		Color of exhaust fumes. ● Dark fumes = abnormal condition, unit needs attention. ● Clear fumes = ideal condition to run the unit.
		Unusual noise from unit.

	Unit is fit, proceed task		STOP operting the unit, Contact Spitwater service agent immediately
	Contact Spitwater service agent / Qualified person for assistance		Do It Yourself, Refer our tips

TABLE-B: Daily inspection checklist

USAGE VS SERVICE FREQUENCY

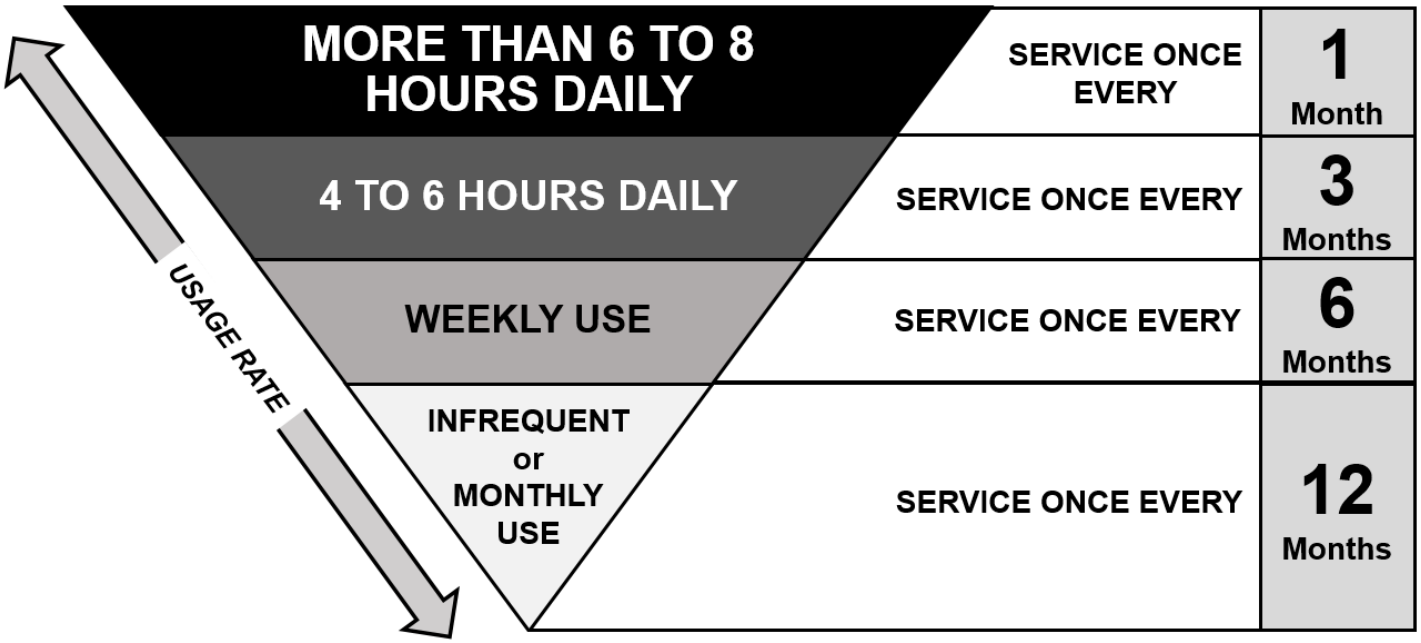

TABLE-A: Usage vs Service Frequency

For more information on service intervals of the Kubota diesel engine, refer manual.

Time interval for checks and replacement listed above are for units subjected to normal operating conditions. Should the unit be subjected to abnormal conditions (eg heavy use, dirty water, extreme temperatures or conditions etc) times should be reduced accordingly.

OIL CHECK POINTS

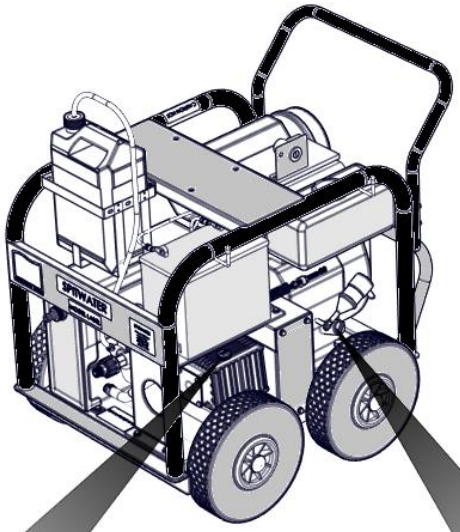

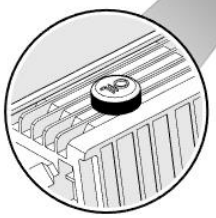

PUMP OIL CHECK

Ensure the unit is on a flat surface.

Check the oil level in the pump using the dipstick or the sight glass on the back / side of the pump. Make sure the level is between min/max level notches on the dipstick, or is level with the indicator on the sight glass

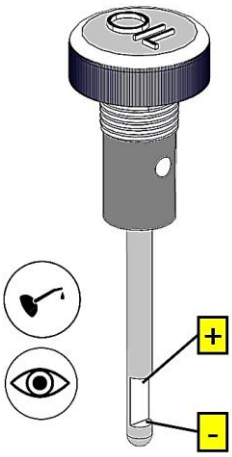

ENGINE OIL CHECK

Put the unit on a flat surface, and check the amount and condition of the oil with an oil plug.

1. Oil Plug
2. Upper limit
3. Lower limit

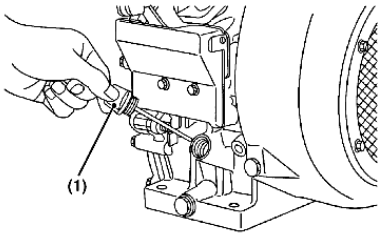

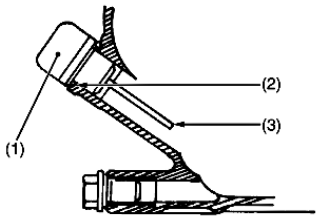

TROUBLESHOOTING GUIDE

If the fault cannot be identified or corrected using the below list (or remedy suggests contacting Spitwater service agent) stop using the unit immediately and contact your authorized Spitwater service agent to rectify.

TROUBLESHOOTING GUIDE		
FAULT	**CAUSE**	**REMEDY**
Pump is running but does not reach rated pressure	Pump sucking air	Check hose / fittings for leaks
	Nozzle is blocked	Remove and clean nozzle
	Water filter dirty	Check and clean water filter
Fluctuating pressure	Pump sucking air	Check hose / fittings for leaks
	Water filter dirty	Check and clean water filter
Pump is noisy	Pump sucking air	Check hose / fittings for leaks
	Water inlet temperature too high	Reduce water temperature
Appearance of “milky” oil in the pump		Contact Spitwater service agent
Water leaking from pump		Contact Spitwater service agent
Oil leaking from pump		Contact Spitwater service agent
Engine does not start/operate correctly	Refer to engine instruction book	Contact Spitwater service agent

TABLE-C: Trouble shooting guide

For all DIESEL engine specific trouble shootings, refer to the enclosed KUBOTA manual.

*For service of your Spitwater high pressure cleaner within Australia, call **1800SPITWATER or** visit **www.spitwater.com.au** for further contact details.*